(No Model.) 2 Sheets—Sheet 1.

L. B. GRAY.

PRESS FOR MOLDING GLASS INSULATORS.

No. 462,862. Patented Nov. 10, 1891.

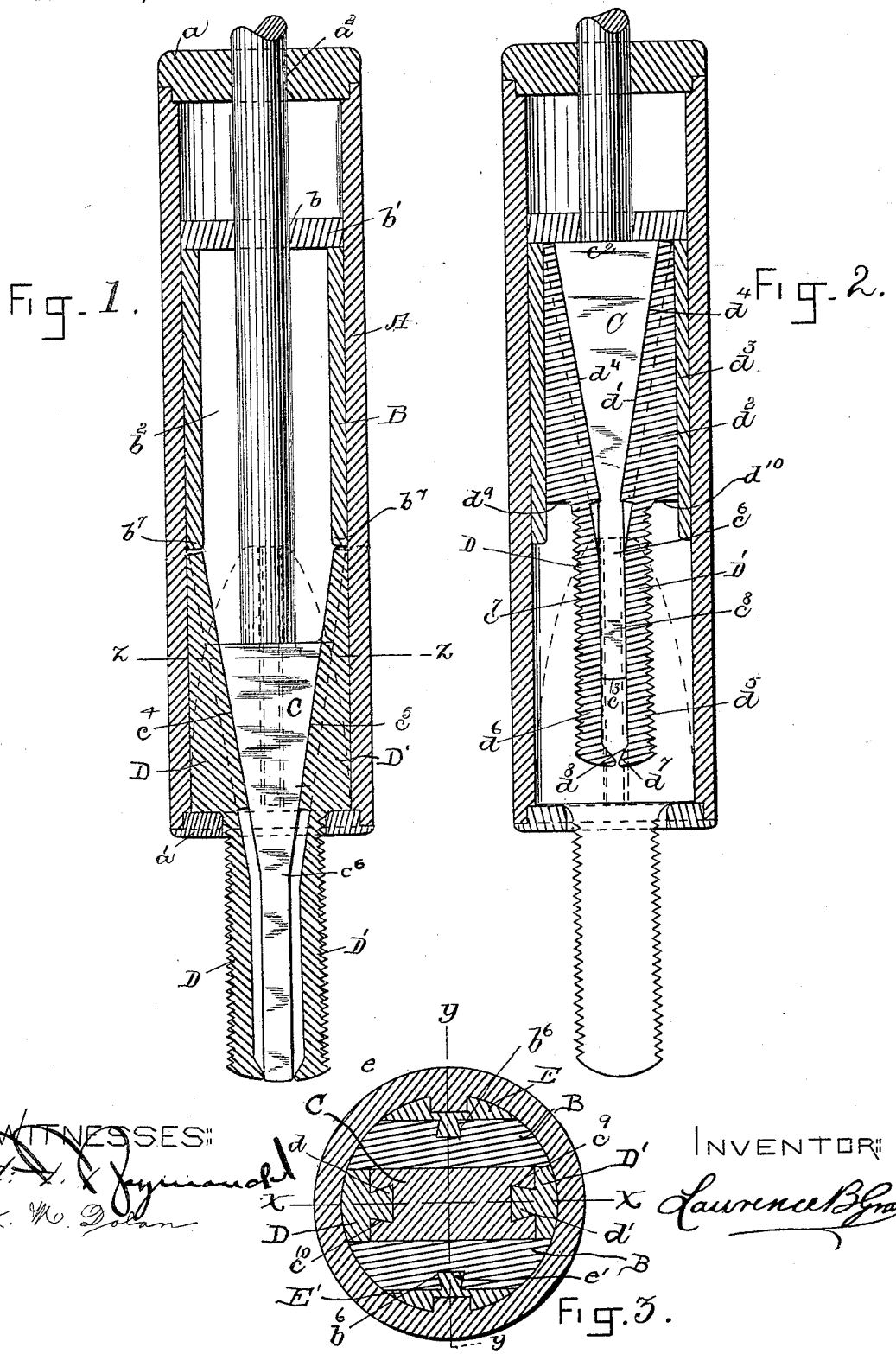

WITNESSES:
F. F. Raymond
J. M. Dolan

INVENTOR:
Laurence B. Gray

THE NORRIS PETERS CO., PHOTO-LITHO., WASHINGTON, D. C.